HEMS G2 wiring

SAFETY INSTRUCTION

Before start with installation, assembly, disassembly, inspection, or any other operation read safety instructions. They contain general safety information for devices approved by Robotina d.o.o..

 **DANGER!**

Disregard manufacturer's safety instructions could result in material damage, injury or even death.

 **DANGER!**

During operation is device under load!

 **WARNING!**

Before installation, disassembly, inspection, or any other operation, make sure that the device is disconnected from the power supply and that with your doing you don’t endanger yourself or others.

 **WARNING!**

**Don’t try to open the device.

Any interference or change may impact device’s properties and significantly affect safety.**

 **WARNING!**

Before connecting device to the power supply, assure that all wires are connected in accordance with the manufacturer's instructions.

Before continue with installation read the manufacturer's installation requirements:

- Installation and electrical connection of the equipment described in this manual must be carried out by qualified or authorized personnel.
- The device must be installed inside the electric box where cannot endanger people or environment.
- During the operation device must not be exposed to humidity, dust, mold or other weather phenomena.
- All connected wires must comply with manufacturer's specifications.
- For installation use only verified electrical-installations tools.
- Around the device has to be assured sufficient ventilation space.

- The manufacturer does not undertake any liability for material or personal damage resulting from use or handling which is not in accordance with the manufacturer's safety instructions.

MC-230

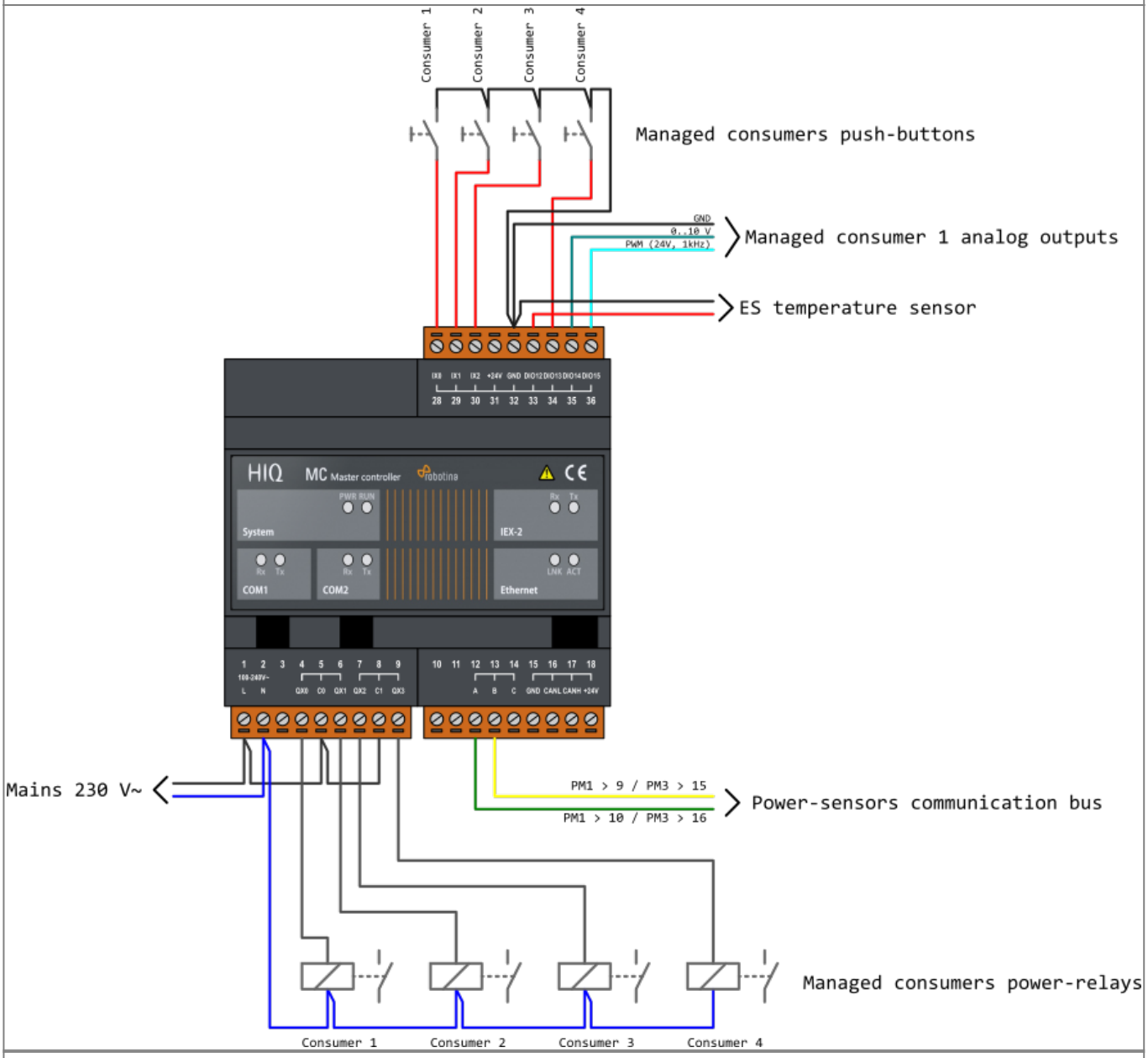

PM-3-I-D

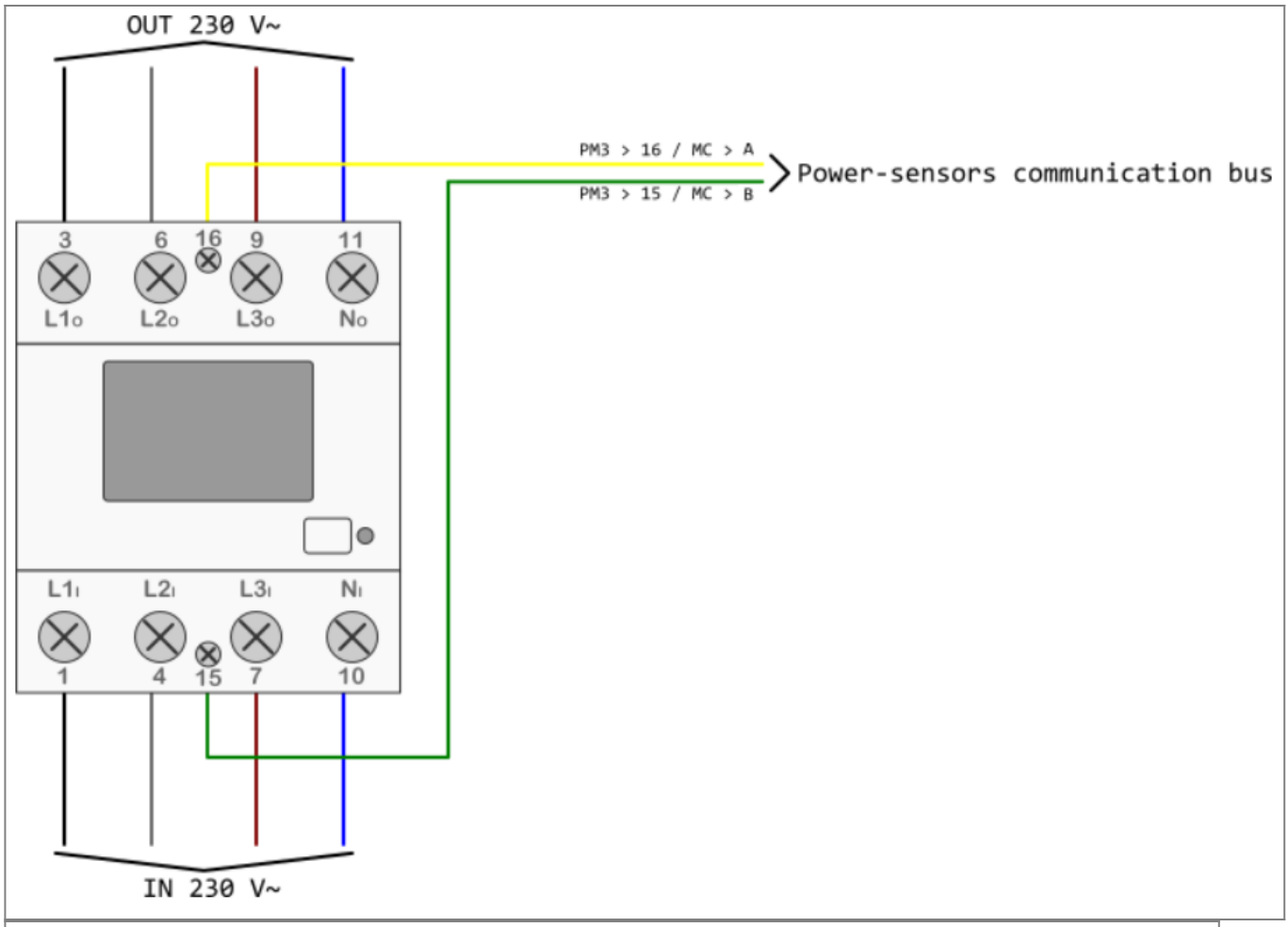

PM-1-E-D

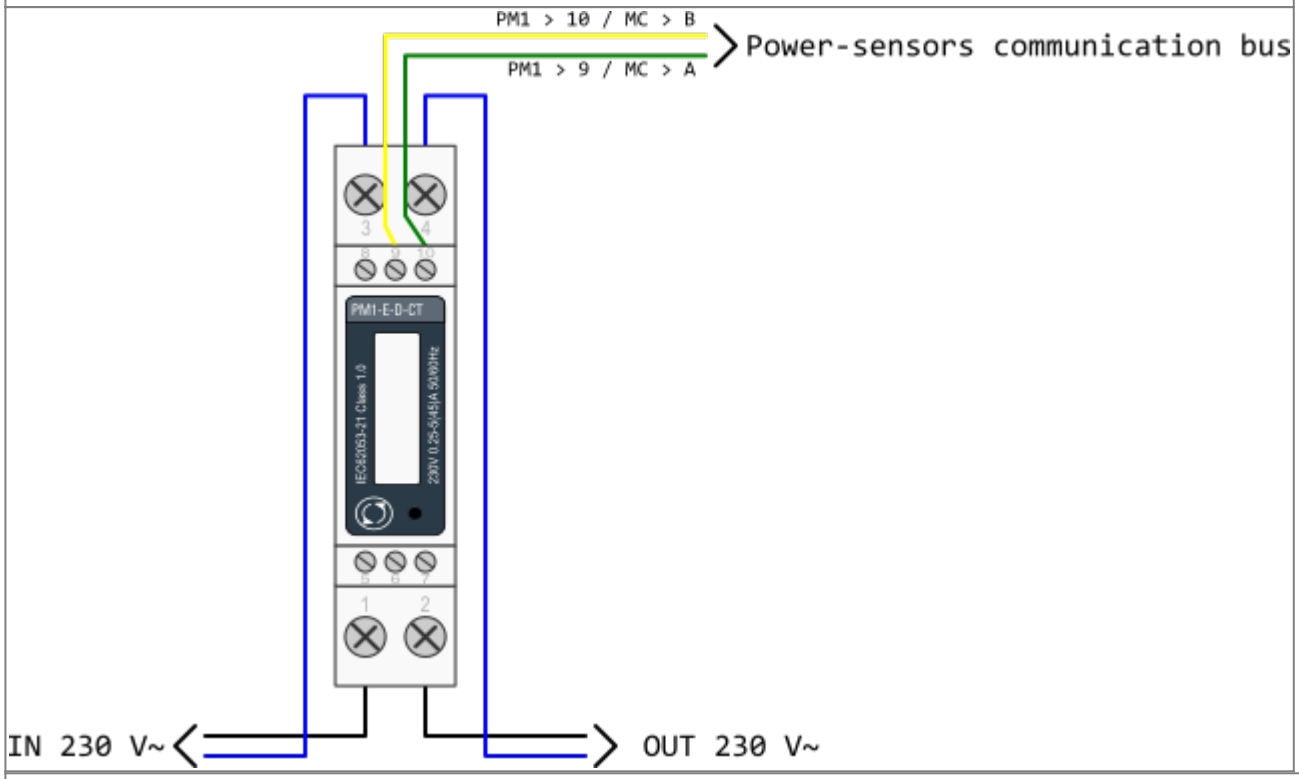

PM-1-E-D-CT

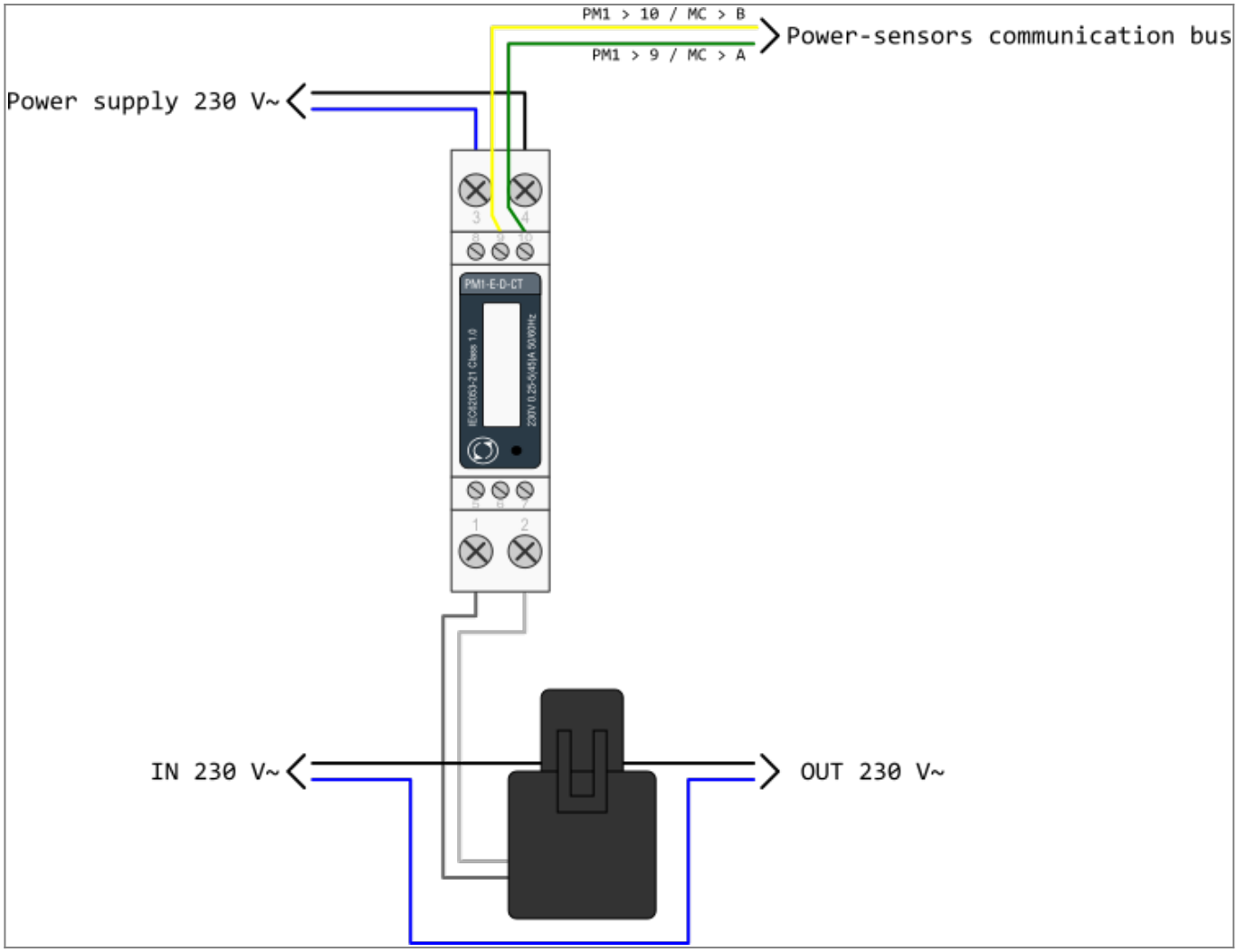

Example of HEMS G2 wiring diagram:

hems_g2.pdf

Example done with Elwin by 3xM.

Archive file:

20180924125415_hems_g2.zip

Custom library components:

components.zip

From:
https://wiki.hiq-home.com/ -

Permanent link:
https://wiki.hiq-home.com/doku.php?id=en:hems:methods_resources:wiring&rev=1539083282

Last update: **2018/10/09 11:08**