HEMS G2 wiring

MC-230

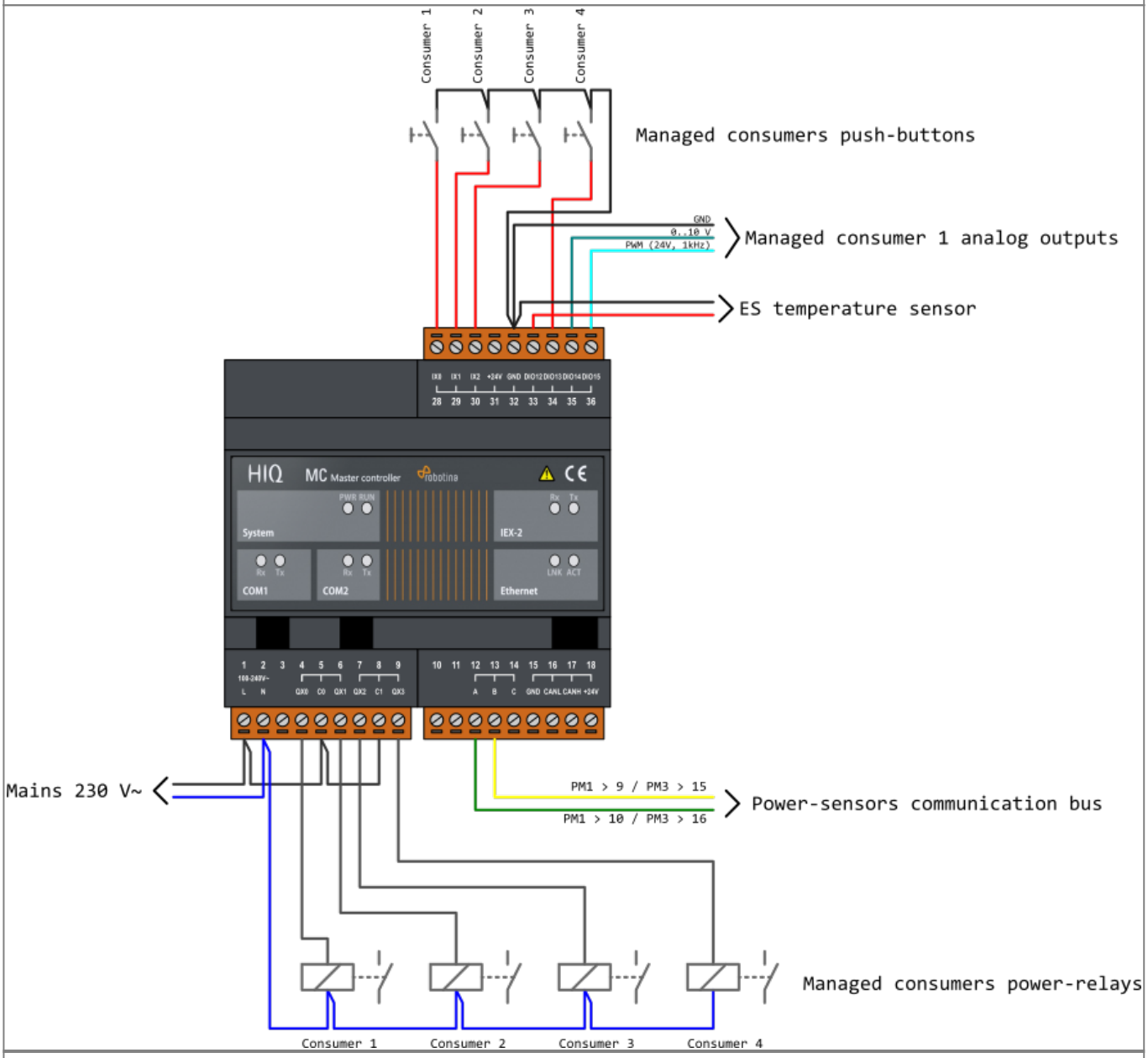

PM-3-I-D

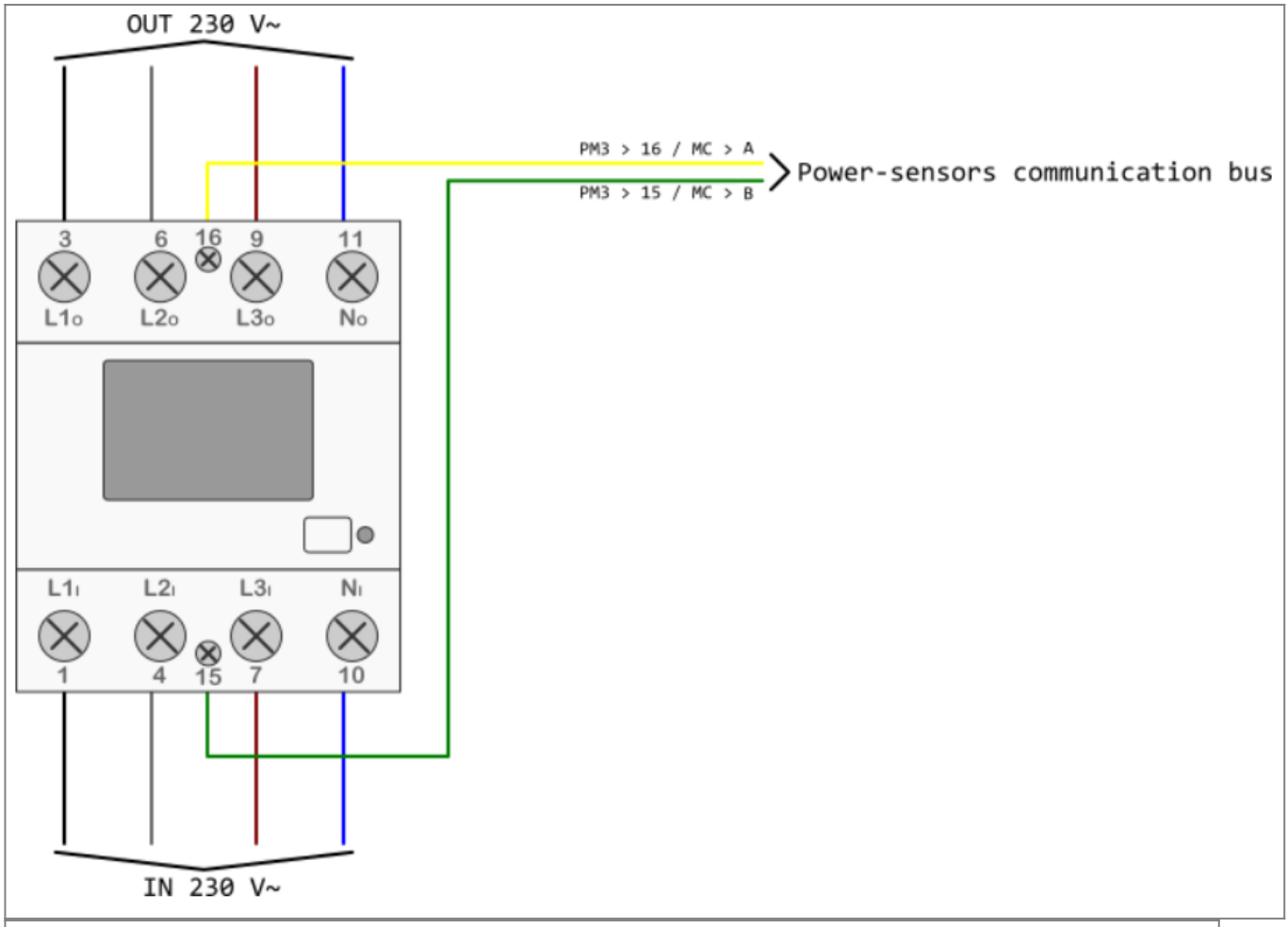

PM-1-E-D

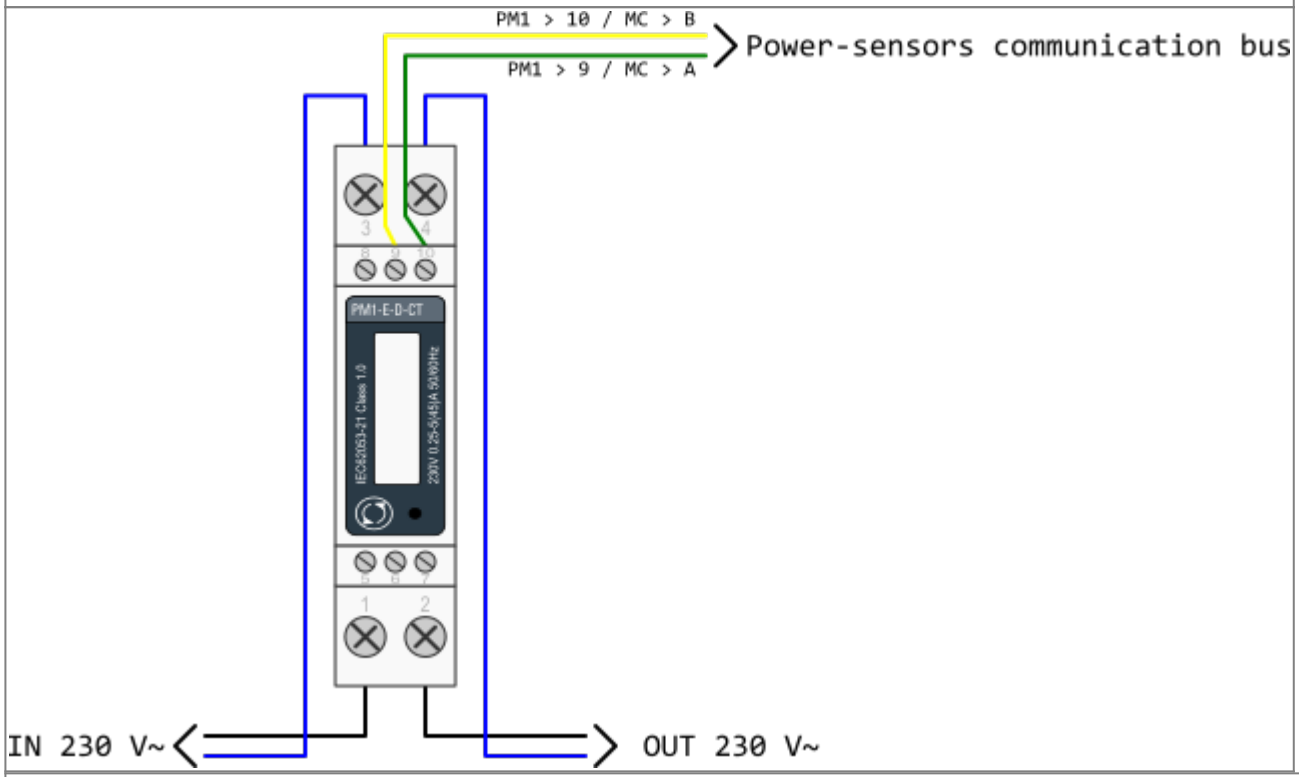

PM-1-E-D-CT

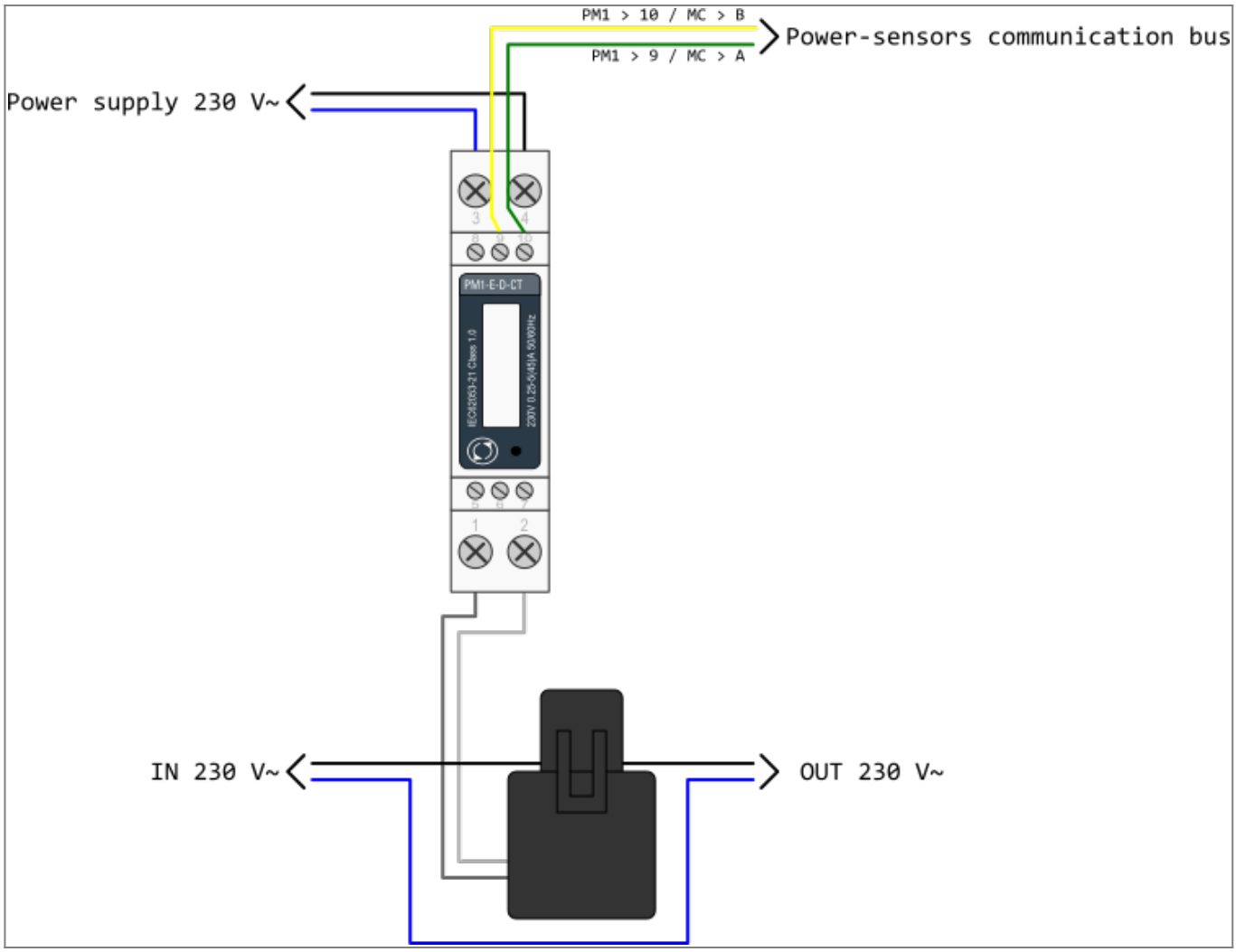

Example of HEMS G2 wiring diagram:

hems_g2.pdf

Example done with Elwin by 3xM.

Archive file:

20180924125415_hems_g2.zip

Custom library components:

components.zip

From:
https://wiki.hiq-home.com/ -

Permanent link:
https://wiki.hiq-home.com/doku.php?id=en:hems:methods_resources:wiring&rev=1539083339

Last update: **2018/10/09 11:08**