IOT Linker 2 Ethernet Port

Advanced EDGE device. Connects Cybro, MC and Robotina Charger to HIQ universe



Order code without Power Supply	**IOT-L2-2**
Order code with AC Power Supply 230VAC/5VDC	**IOT-L2-2-AC**
Order code with DC Power Supply 24VDC/5VDC	**IOT-L2-2-DC**
License for specific IOT linker software	**IOT-C2-xx; xx-version of the software**
4G LTE USB modem for IOT linker	**IOT-L2-W**
Mounting:	DIN rail, (Optional wall)
Dimensions:	60 x 61 x 26 mm
Connection:	LAN Port: connects to Cybro, MC or Robotina Charger; WAN Port: uplink to HIQ Universe

- Robust and safe connection of HIQ and 4S systems to HIQ Universe cloud platform.
- Secure access and communication (TLS encryption)
- Local data buffer, no data loss
- User data safety according to GDPR
- Secure remote access to HIQ controllers and chargers

Technical specifications

Power supply:	USB-C, 5V DC

Storage:	MicroSD x1 for external storage up to 128GB
USB Host:	1x 2.0 Type-A
Network:	2x 10/100/1000M Ethernet
Working temp.:	0℃ to 40℃
4G connection :	USB
Software :	IOT linker system software is sold separately on MicroSD card

Mounting

DIN Rail, Optional Wall





IoT Linker LAN

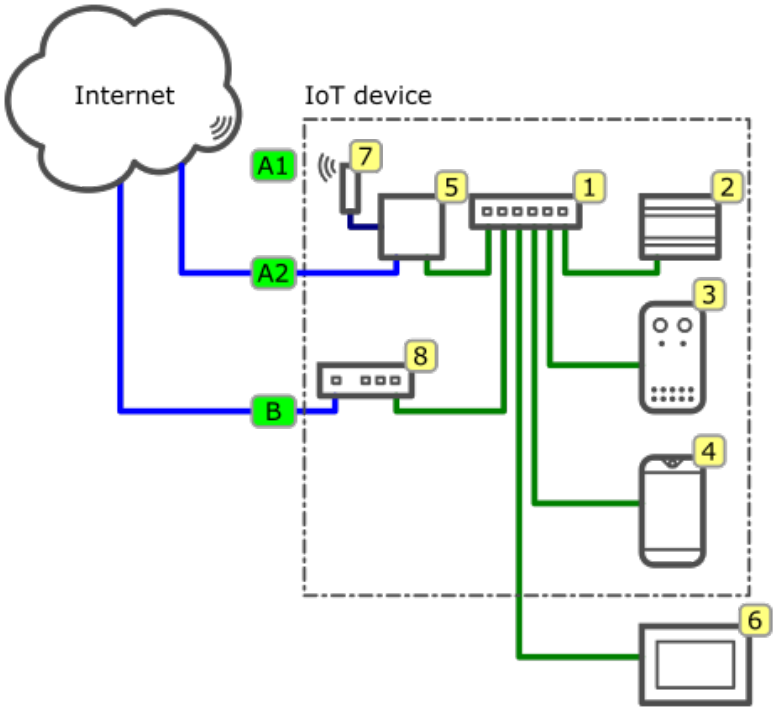

ID	Description
A1	4G (LTE) internet access
A2	ETHERNET internet access; Linker as a router
B	ETHERNET internet access; Additional router

ID	Description	LAN settings
1	LAN (PoE) switch	-
2	Main Controller (MC)	IP: 192.168.10.11
3	TOF sensor (IoT device 1)	IP: 192.168.10.20
4	Tempetature and mask sensor (IoT device 2)	IP: 192.168.10.21
5	Linker	IP (A): 192.168.10.10 / (B): 192.168.10.12
6	GUI display	IP: DHCP
7	USB 4G LTE modem	-
8	Additional router	IP: (B) 192.168.10.10

General LAN settings	
Subnet Mask	255.255.255.0
Gateway	192.168.10.10
DNS 1	8.8.8.8
DNS 2	8.8.4.4

Router settings	
DHCP Server	Enabled
	192.168.10.100 - 192.168.10.150
NAT	
Ext. port	**Int. IP:port**
:8443	192.168.10.20:80
:8444	192.168.10.21:80

From:
https://wiki.hiq-home.com/ -

Permanent link:
https://wiki.hiq-home.com/doku.php?id=en:hiq_hw:iot_linker&rev=1670576127

Last update: **2022/12/09 08:55**