Wireless on wall power meter

Wireless on wall rail power meter, external power relay switching and consumer measurement

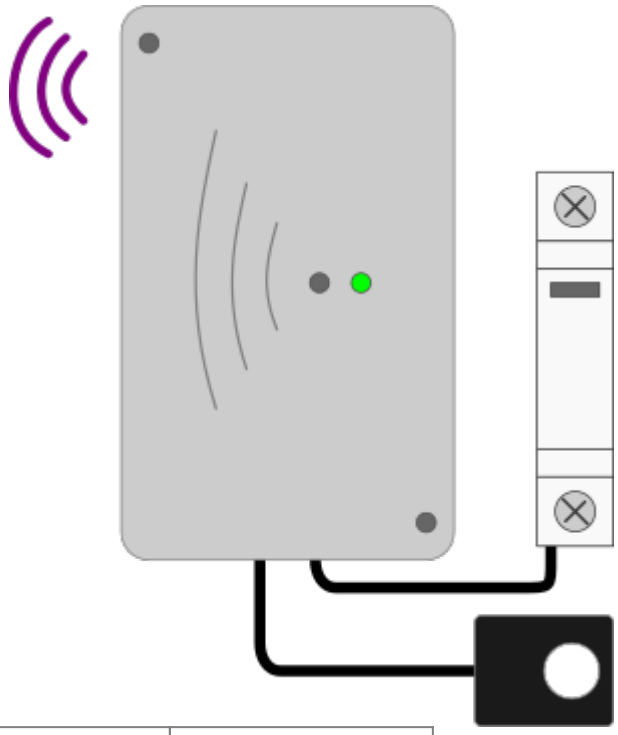

Model number:	**PM1-WN-W**
Mounting:	On wall
Dimensions:	76 × 116 × 25 mm

Used for single phase managed consumer	
✔	toggling power supply using external power relay
✔	measuring power and energy using clamp-on current transformer

Features

- Wireless load management, external power-relay control
- Consumer measurements, clamp-on current transformer

General description

Wireless on wall power meter PM1-WN-W is a on wall mounted control unit. It can switch on/off an external power-relay and measure active power and energy consumption.

This device has to be directly and continuously main powered. For network purposes, it is a Router

(Repeater) i.e. it has function of maintaining radio traffic from and to other similar devices and it can also act as a parent device for battery-powered sensors of the same family.

Technical specifications

POWER SUPPLY	85-250 Vac; 50/60 Hz
WIRELESS CHARACTERISTICS	2405 MHz ÷ 2480 MHz
	DSSS Modulation
	Nominal transmission Power +3dBm
	IEEE 802.15.4 compliant
	Stack EmberZNet3.5.x
	Stack version 0
	Proprietary profile ID
	Proprietary encryption key
MEASURES	Energy consumed [Wh]
	Active Power [W]
	Time of measurement [sec]
MAXIMUM MEASURED LOAD	15 kW
RELAY CHARACTERISTICS	Contacts 40mA 250V (resistive load)
CONNECTIONS	Terminal blocks
OPERATING CONDITIONS	-10 + 55 °C
PROTECTION CLASS	IP30

Terminals

PM1-WN-W			CT	Power source	Measured load	Switched load
PE	PE	1	/	PE	/	/
	PE	1a	/	/	PE	PE
Neutral	N	2	/	N	/	/
	N	2a	/	/	N	N
Phase IN / CT	L	3	BK	L	L	/
CT	L	3a	RD	/	/	/
Phase OUT	L	3b	/	/	/	L

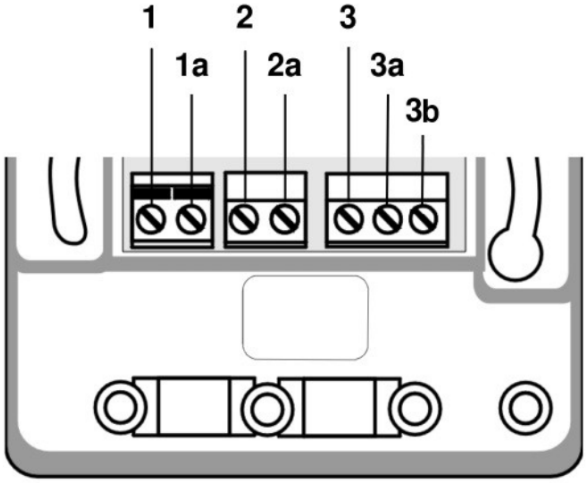

Connection

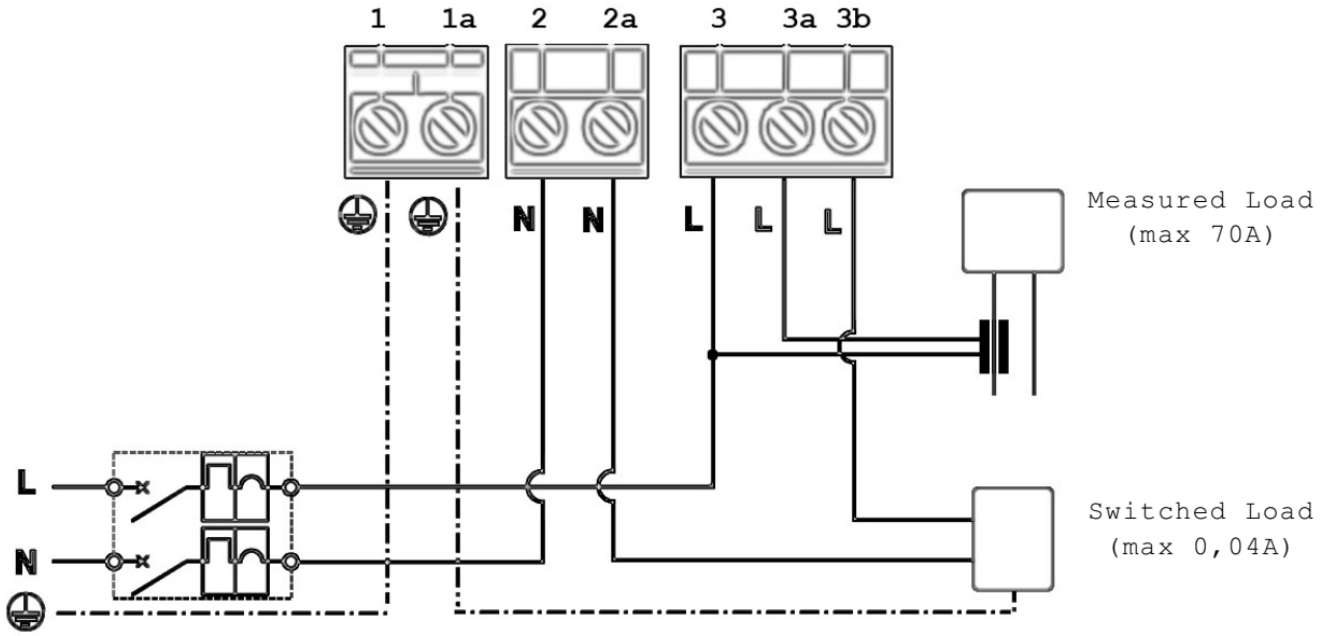

From:
https://wiki.hiq-home.com/ -

Permanent link:
https://wiki.hiq-home.com/doku.php?id=en:hiq_hw:pm1-wn-w&rev=1565779794

Last update: **2019/08/14 10:49**