Thermostat

electronic thermostat



Model number:	**TH-1M-IQ**
Mounting:	on-wall, 3M rectangular box
Dimensions:	122×80×23mm

Applications

- room / heating zone thermostat

Features

- alternate setpoint
- fan options:
  - manual fan speed
  - fan speed limits
  - fan-max with time limitation
- night mode
- various sensor options:
  - internal
  - external
  - remote

General description

TH-1-IQ module belongs to room/zone thermostat controllers. It can be used for any heating and/or cooling system including: fan-coils, hot water or electrical radiators, ceiling fans, floor/ceiling heating/cooling, split AC. TH series provide maximum comfort and energy saving functionality. Set-points are selectable on the unit or through other devices. Advanced functionality including smart-

phone operation, internet operation, scheduling, HIQ automations, automatic weather response and more are provided when connected to HIQ Home Controller and HIQ universe.

Technical specification

Window switch input:	internal pull-up 12V, 2mA
Temperature measurement:	internal or external ES/ES-A
Power supply:	24V/15mA
Ingress protection:	IP20
Operating temperature:	0..45°C
Storage temperature:	-20..75°C
Relative humidity:	0..95% n/c

Terminals

IEX2 BUS	**+24V**	IEX2 bus
	CANH	
	CANL	
	GND	
Window magnetic switch	**IX0**	Digital input
	GND	
External temperature sensor ES / ES-A	**TS1**	Temperature sensor input
	GND	

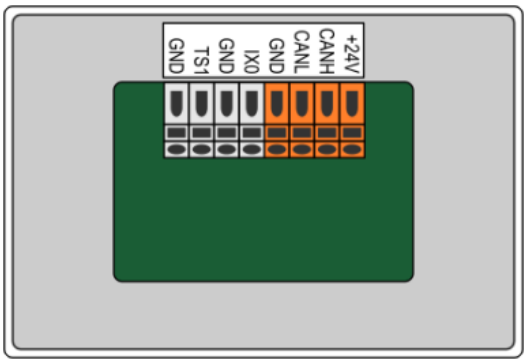

When installing: “Autoaddress” button will link FC-1-IQ unit with lowest serial number with thermostat with lowest serial number and so on.

From:
https://wiki.hiq-home.com/ -

Permanent link:
https://wiki.hiq-home.com/doku.php?id=en:hiq_hw:th-1m-iq&rev=1563950353

Last update: **2019/07/24 06:39**